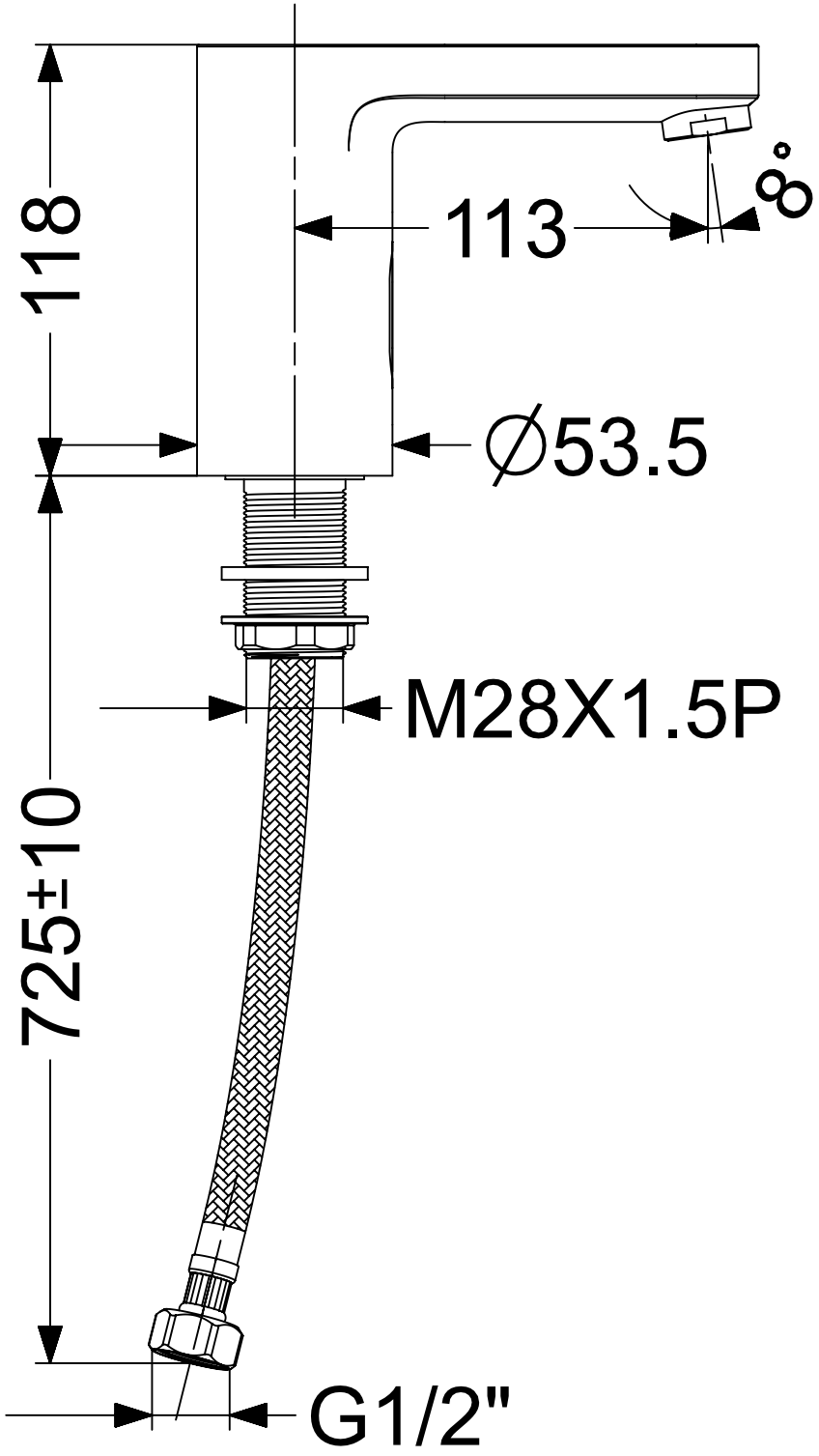

ST002-CP_
SENSOR TAP