ALIRA

SINGLE LEVER TALL BASIN MIXER WITHOUT POP-UP

TECHNICAL SPECIFICATIONS

S. No.	Parameter	KEROVIT Faucets Specification
1	SKU Code	**KB3611011-ND-MBRG**
2	Product Description	**Single Lever Tall Basin Mixer Without Pop-Up**
3	Base Material (%)	**Brass Ingots DC2B** as per **IS:1264-1997**: Cu (58.5–63.0%), Sn (0.0–1.0%), Pb (1.0–1.5%), Ni (0.0–1.0%), Al (0.4–0.8%), Mn (0.0–0.01%), Total Impurity (0.0–2.0%), Zn (Remainder)
4	Nominal Size	**15 mm**
5	Operating Pressure	**0.5 to 5 Bar** Water Pressure
6	Wall Thickness	**3 to 3.5 mm**
7	Operating Mechanism	**Forced Opening**
8	Finish	**MBRG**, DFT **22 Micron**
9	Hydraulic Characteristics (Discharge)	**>20 LPM at 3 Bar** Water Pressure (IS 8931:2021)
10	Aerator Size	**8 mm × 32 mm**, with Laminar Flow
11	Water Tightness Characteristics	**12 Bar** Water Pressure (IS 8931:2021)
12	Pressure Resistance Characteristics	**25 Bar** Water Pressure (IS 8931:2021)
13	Salt Spray Testing	Pass in **Acetic Acid Salt Spray (>96 Hours)**
14	Adhesion Test	**1200 Cycles** Pass of Acetone Rub
15	Endurance Test	**500,000 Cycles**
16	Available Color Finishing	**Chrome & Rose Gold (CRG), Matte Black & Rose Gold (MBRG)**





Matte Black & Rose Gold

Chrome & Rose Gold

TECHNICAL DRAWING

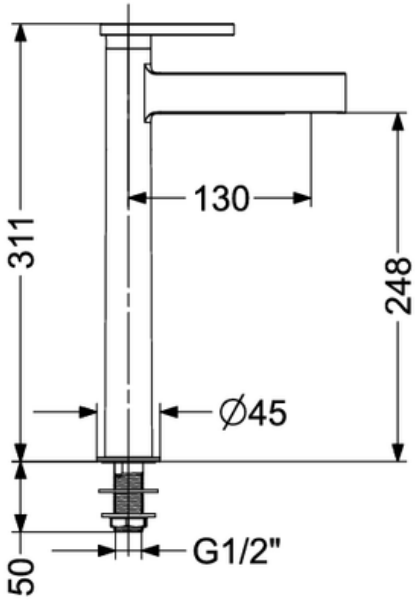

TOLERANCE OF THE CERAMIC PRODUCTS WITH DIMENSIONS ≥75 MM IS ± 2 % OR ± 2 MM OF THE SPECIFIED DIMENSION WHICHEVER IS MORE, AND DIMENSIONS <75 IMENSION WHICHEVER IS MORE.
AS A PART OF CONTINUOUS IMPROVEMENT, KEROVIT RESERVES THE RIGHT TO MODIFY THE PRODUCTS WITHOUT ANY PRIOR INFORMATION. THE ACCESSORIES SHOWN ARE FOR VISUAL REFERENCE ONLY.