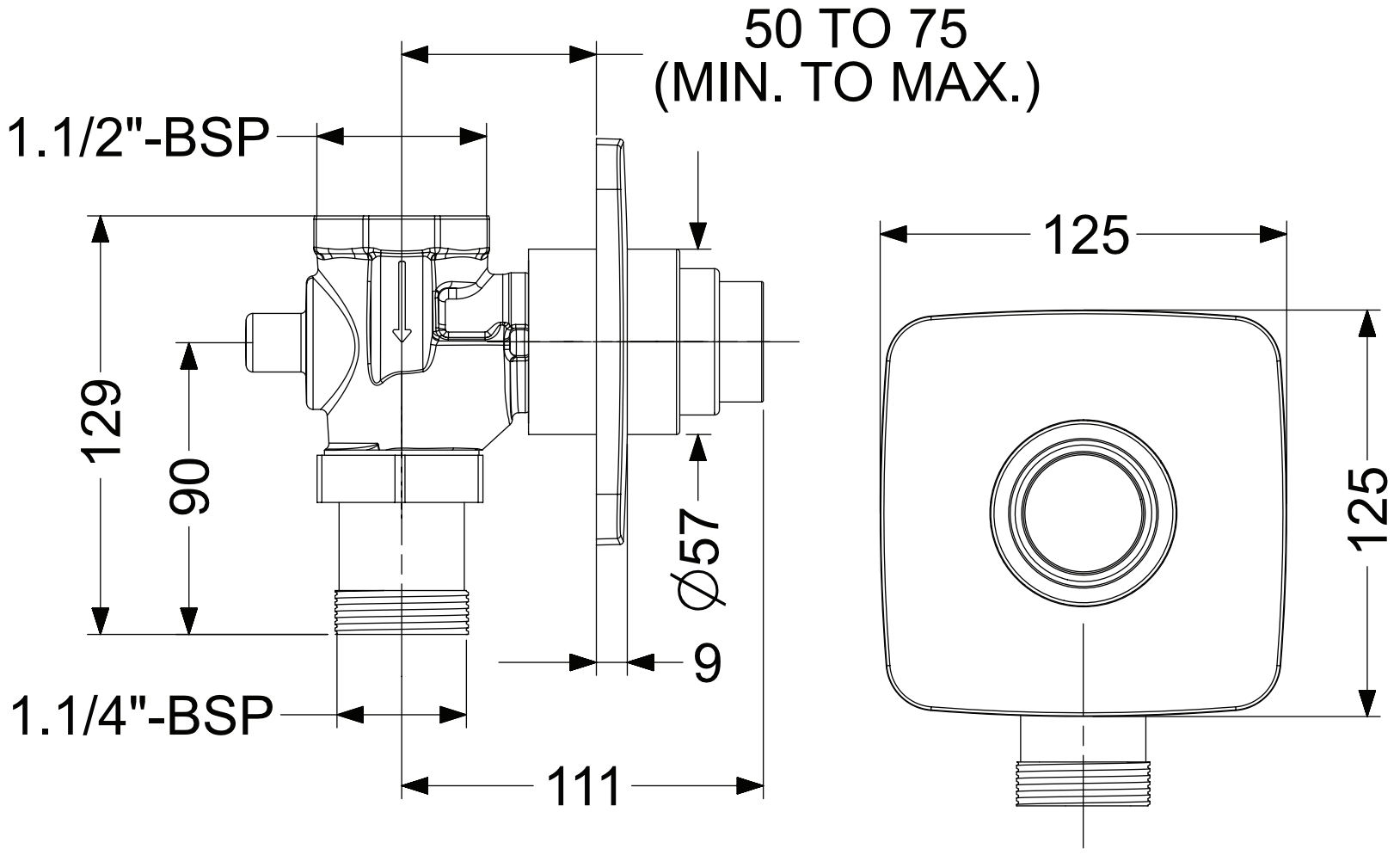
50 TO 75
(MIN. TO MAX.)
1.1/2"-BSP
129
90
Ø57
9
1.1/4"-BSP
111
125
125