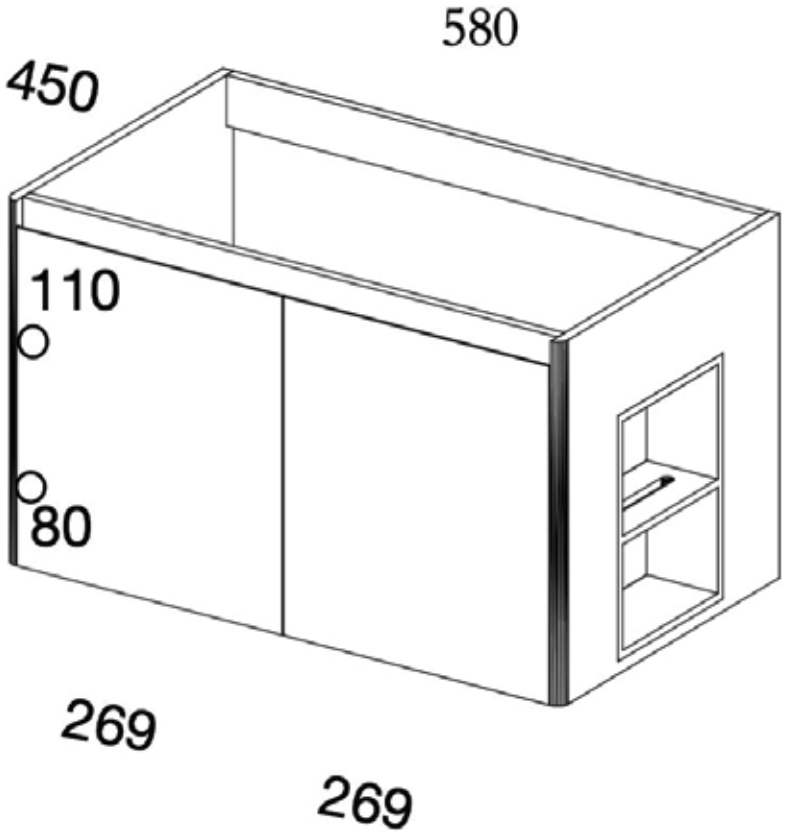

Main Cabinet

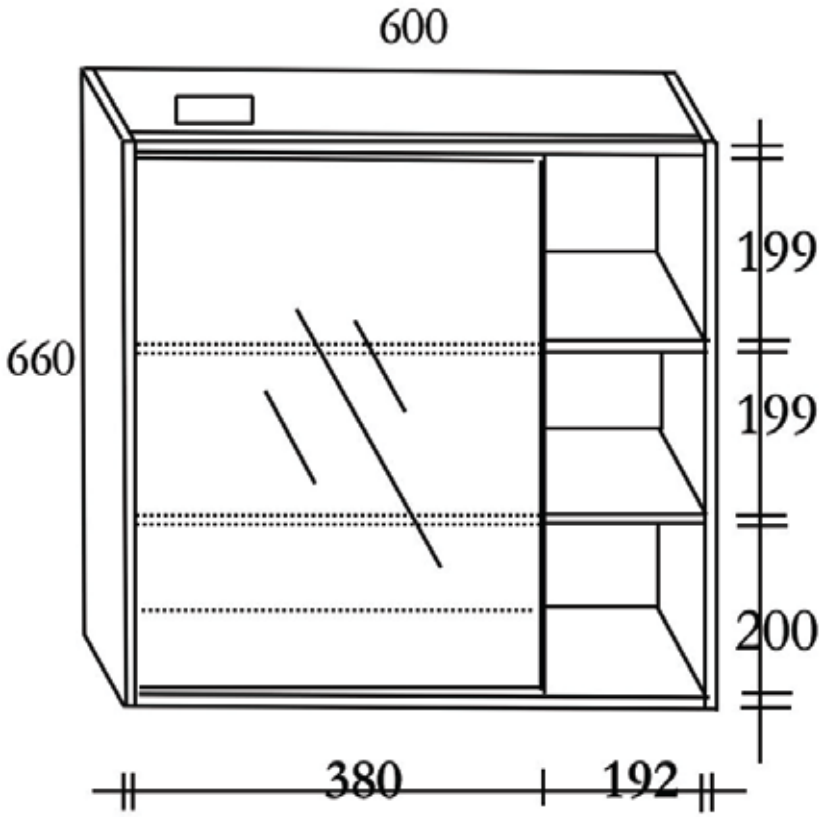

Mirror Cabinet