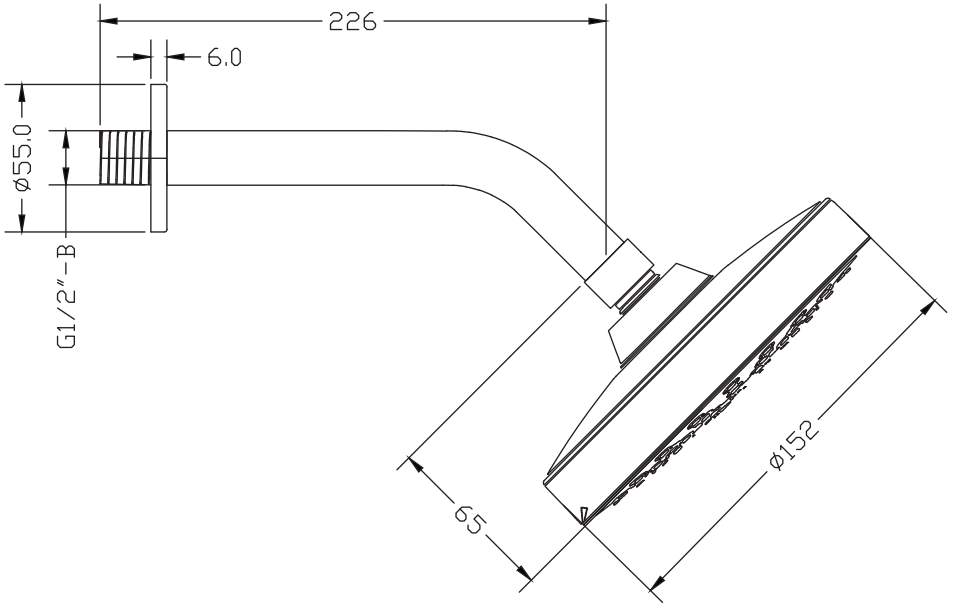
226
6.0
ø55.0
G1/2"-B
65
ø152