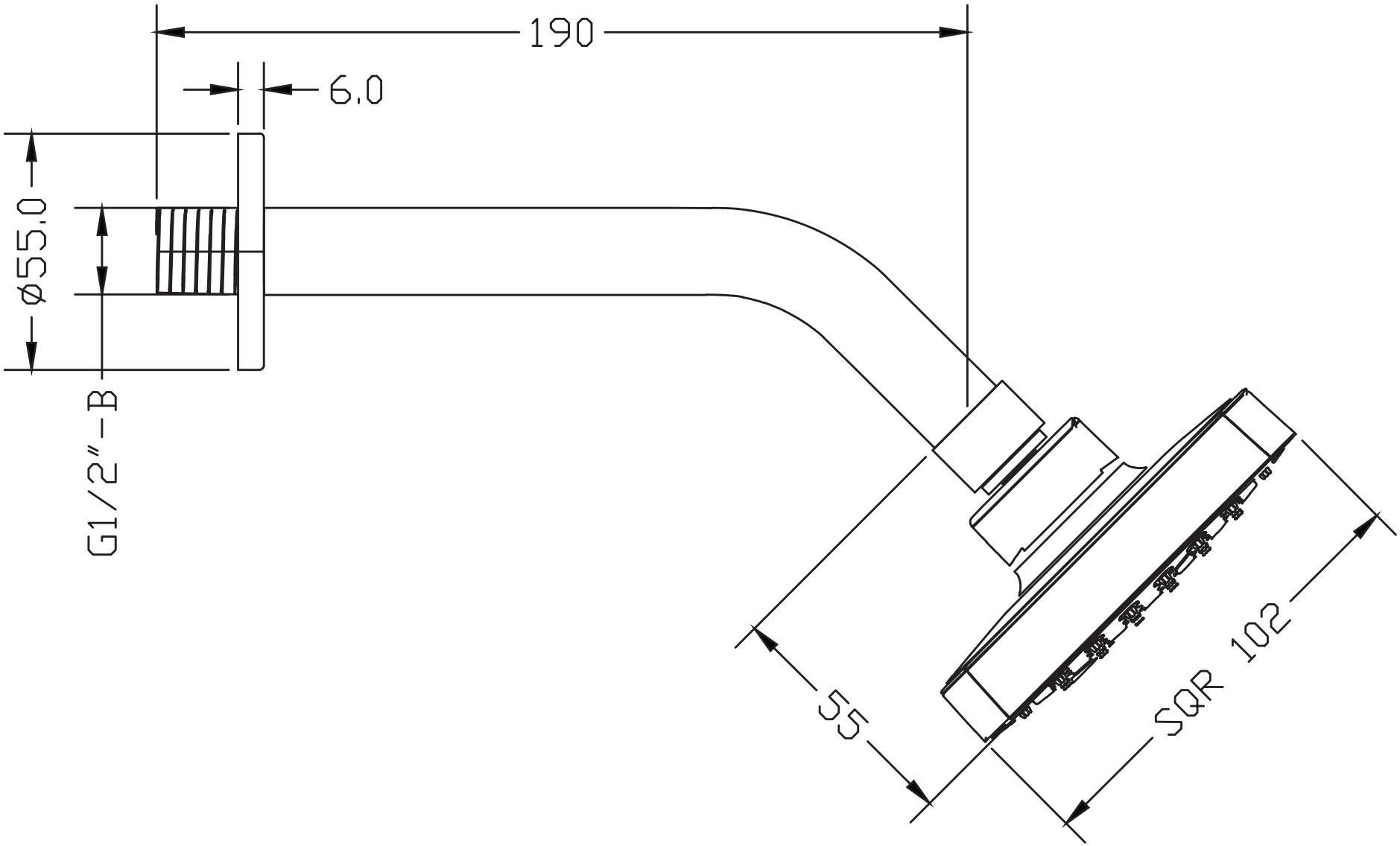
190
6.0
ø55.0
G1/2"-B
55
SQR 102