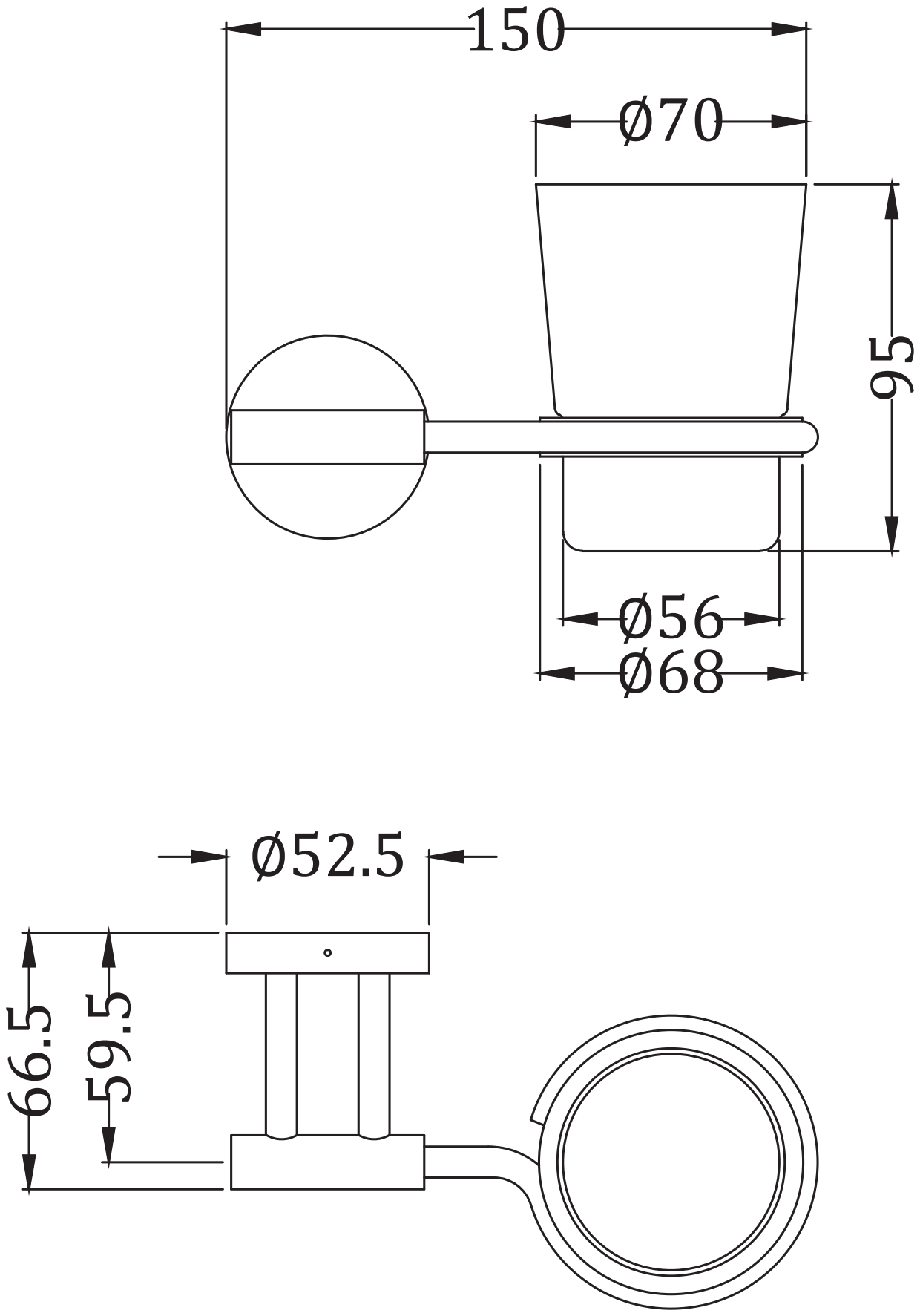
150
Ø70
95
Ø56
Ø68
Ø52.5
66.5
59.5