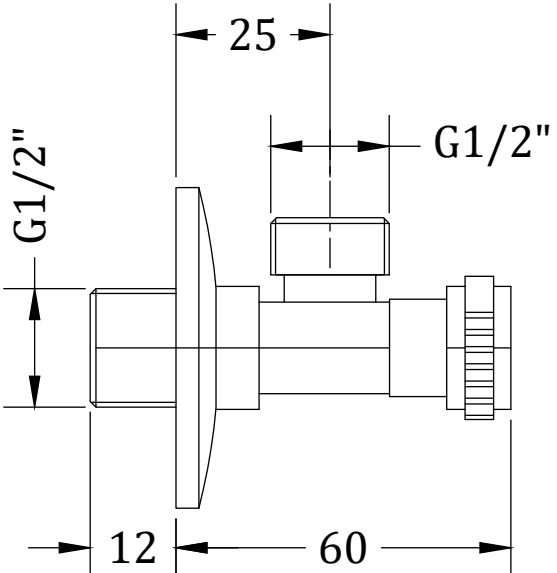
25
G1/2"
G1/2"
12
60

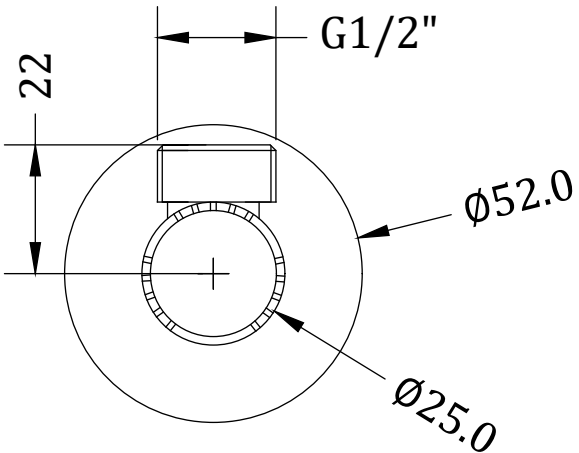
G1/2"
22
Ø52.0
Ø25.0