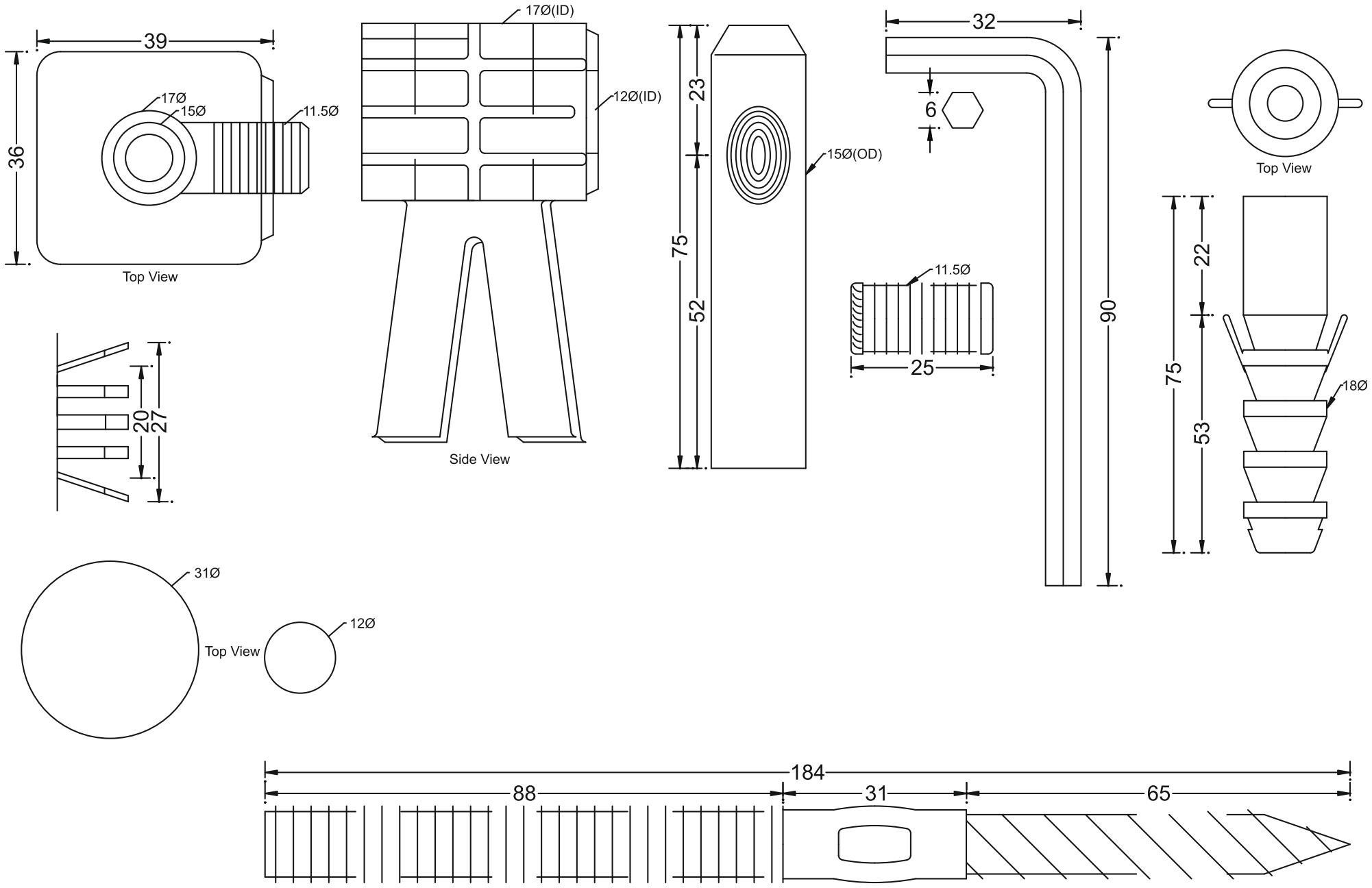
39
36
17Ø
15Ø
11.5Ø
Top View
17Ø(ID)
12Ø(ID)
Side View
23
52
75
15Ø(OD)
32
6
90
11.5Ø
25
Top View
22
53
75
18Ø
20
27
31Ø
Top View
12Ø
184
88
31
65