EXTENSION NIPPLE · KA970006 / 05 / 02 / 03 / 04

KA970006 EXTENSION NIPPLE 1"

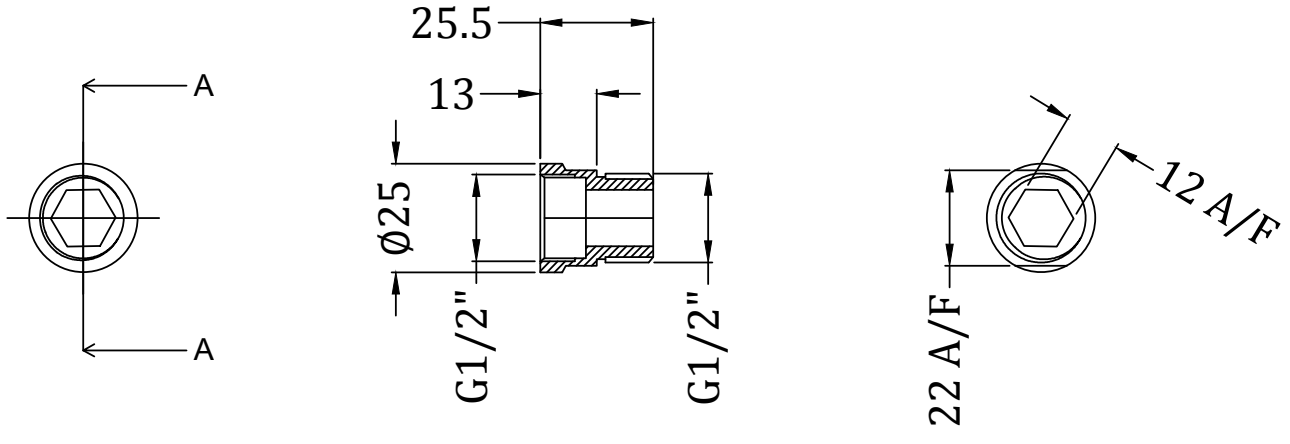

SECTION A-A

KA970005 EXTENSION NIPPLE 1.6"

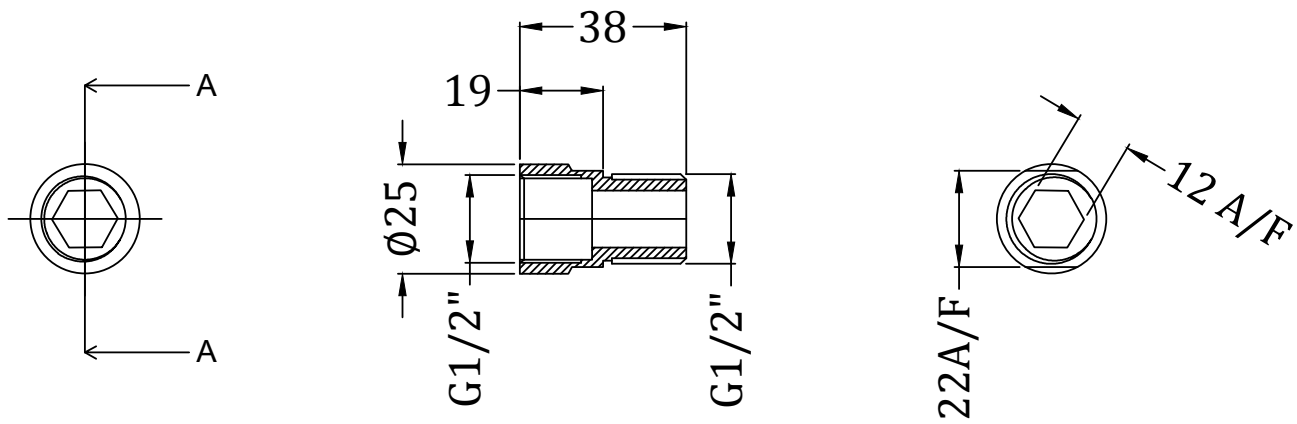

SECTION A-A

KA970002 EXTENSION NIPPLE 2"

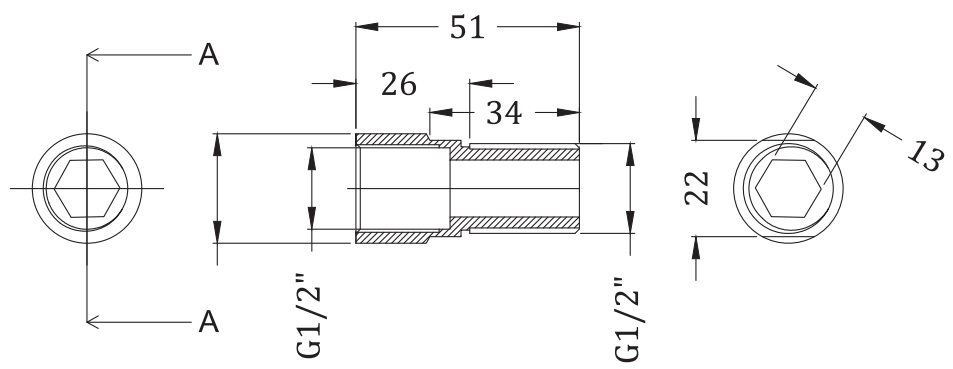

SECTION A-A

KA970003 EXTENSION NIPPLE 2.5"

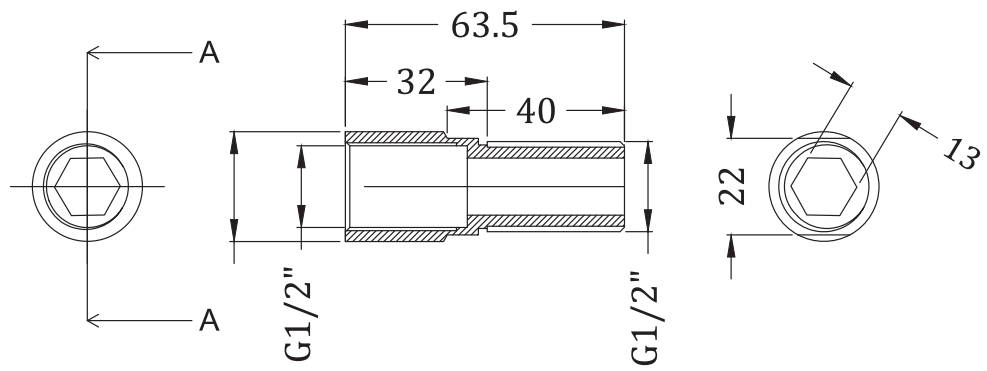

SECTION A-A

KA970004 EXTENSION NIPPLE 3"

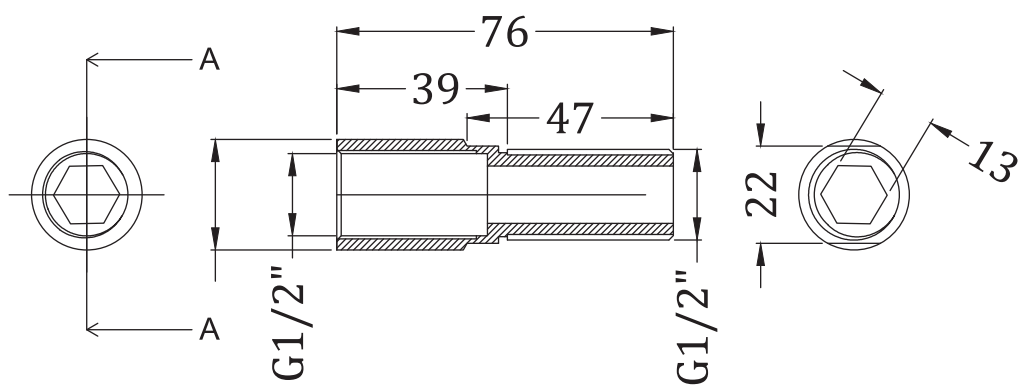

SECTION A-A