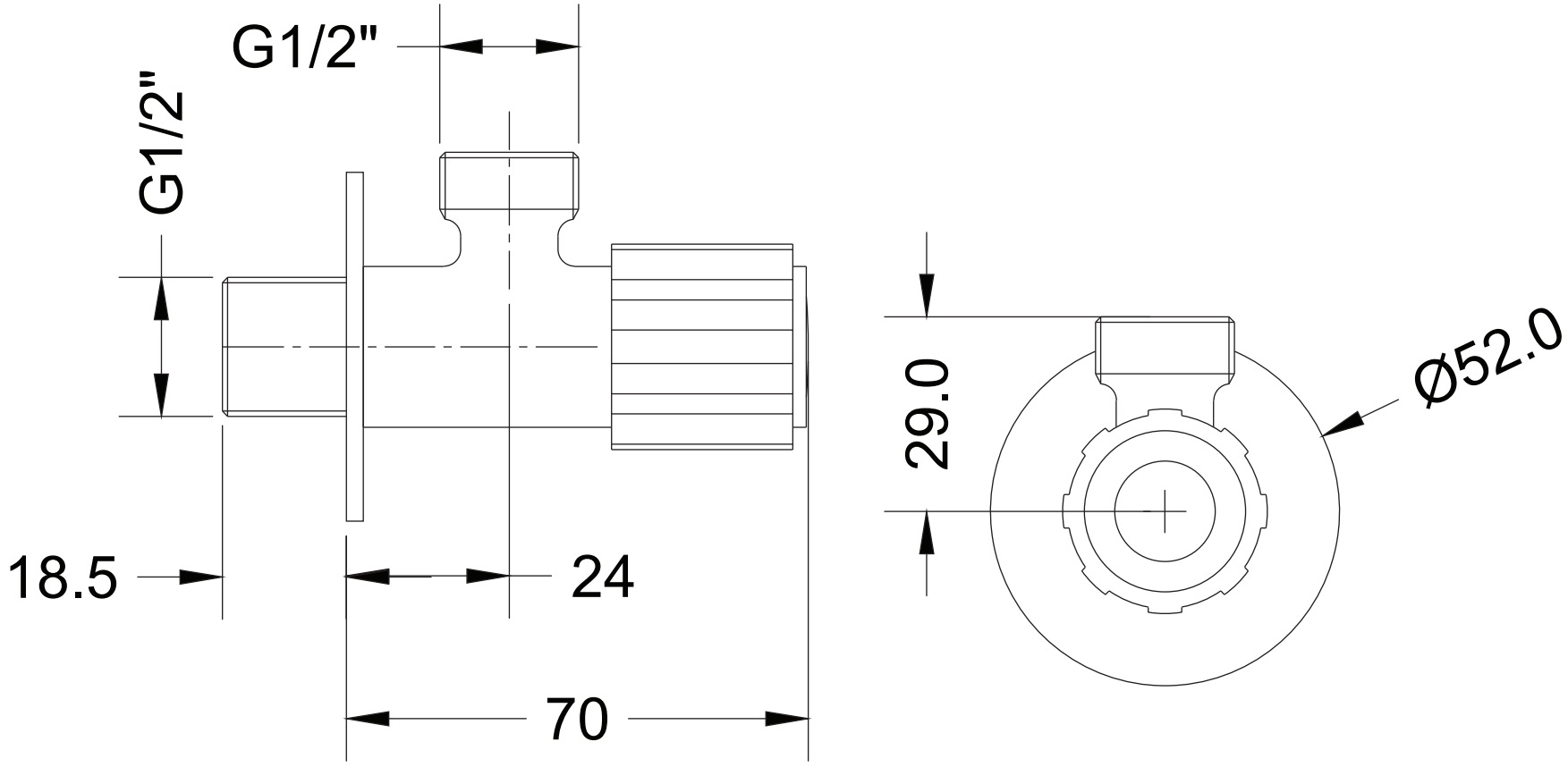
G1/2"
G1/2"
18.5
24
70
29.0
Ø52.0