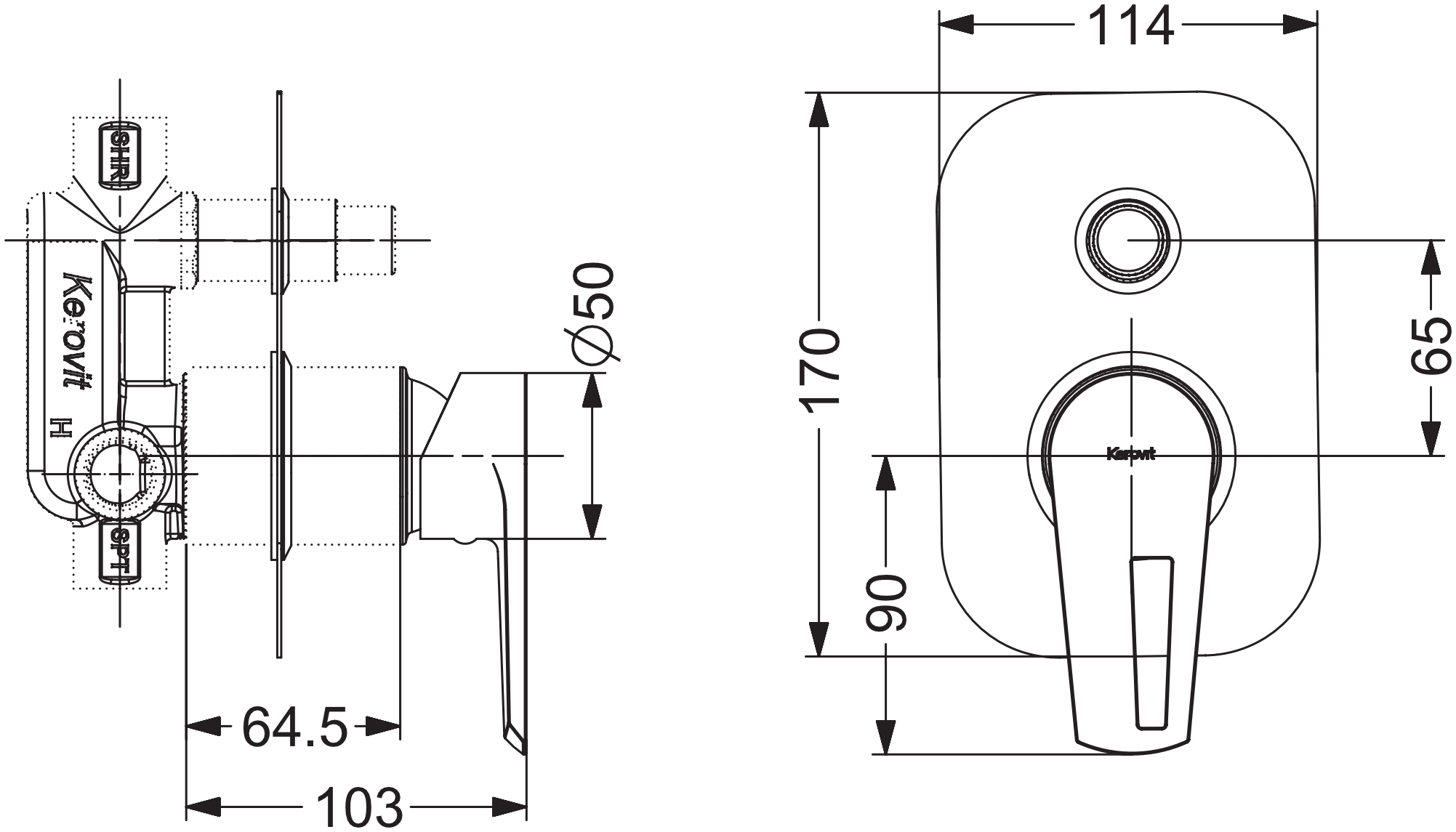

SHR
Kerovit
H
SPT
Ø50
64.5
103
114
170
65
90
Kerovit